	DESCRIPTION	QTY
1	8寸腳輪	4
2	調教腳	4
3	2米橫杆	8
4	斜杆	4
5	鋁合金開孔平台	2
6	四級窄架	/
7	四級窄梯架	/
8	三級窄架	2
9	三級窄梯架	2
10	二級窄扶手	2
11	2米窄踢腳板	1

Notes:

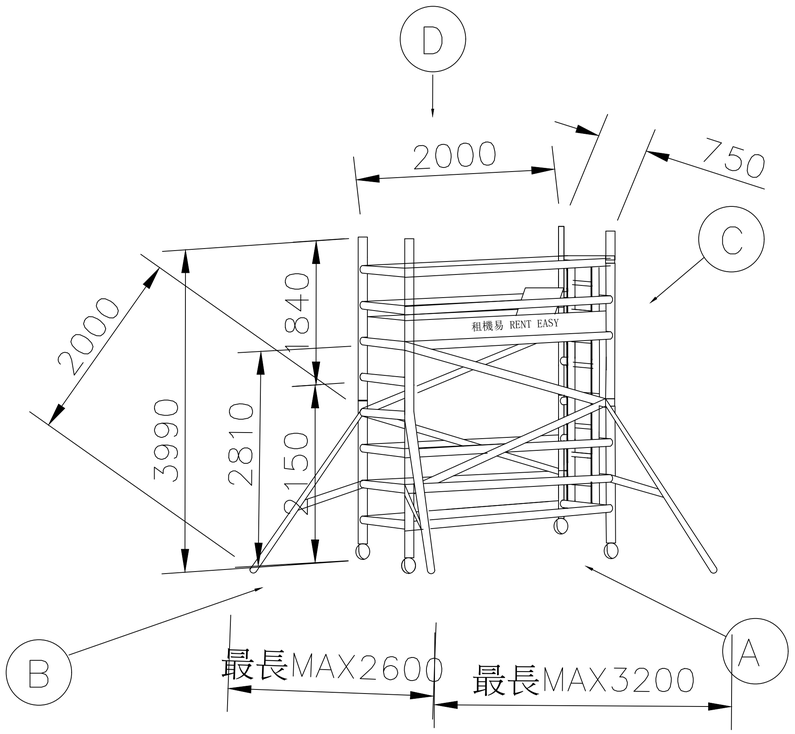

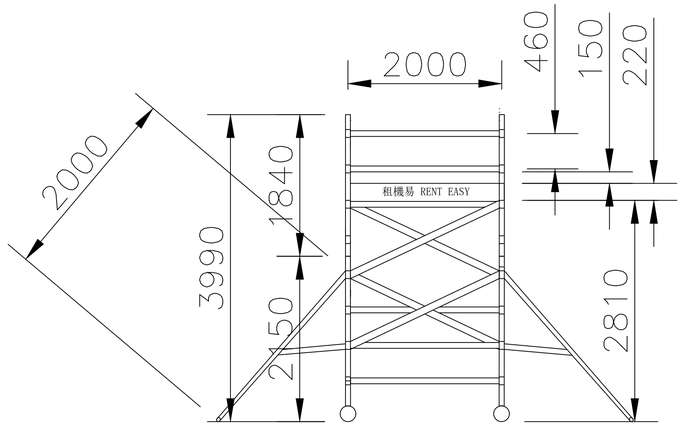

VIEW A

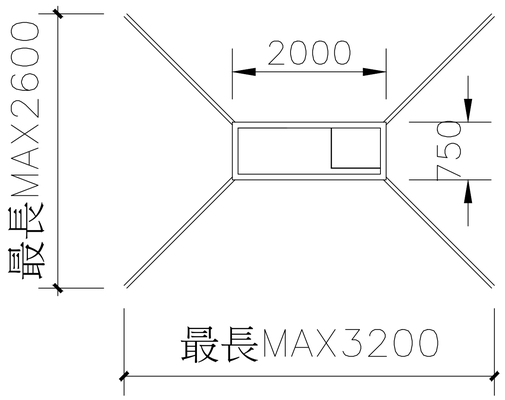

VIEW D

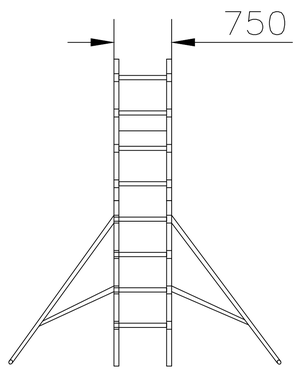

VIEW B

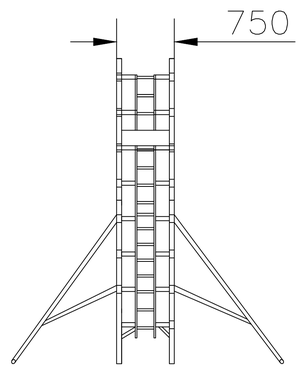

VIEW C

REV:	DESCRIPTION:	BY:	DATE:
STATUS:			

CLIENT:

ARCHITECT:

SITE:

TITLE: 2.81M SAFETY PLATFORM (THIN)

SCALE AT A1:	DATE:	DRAWN:	CHECKED:
1:40	11/03/2025	TW	TW
PROJECT NO:	DRAWING NO:		REVISION:
	SP0006		0